SAMPLE DRAWING

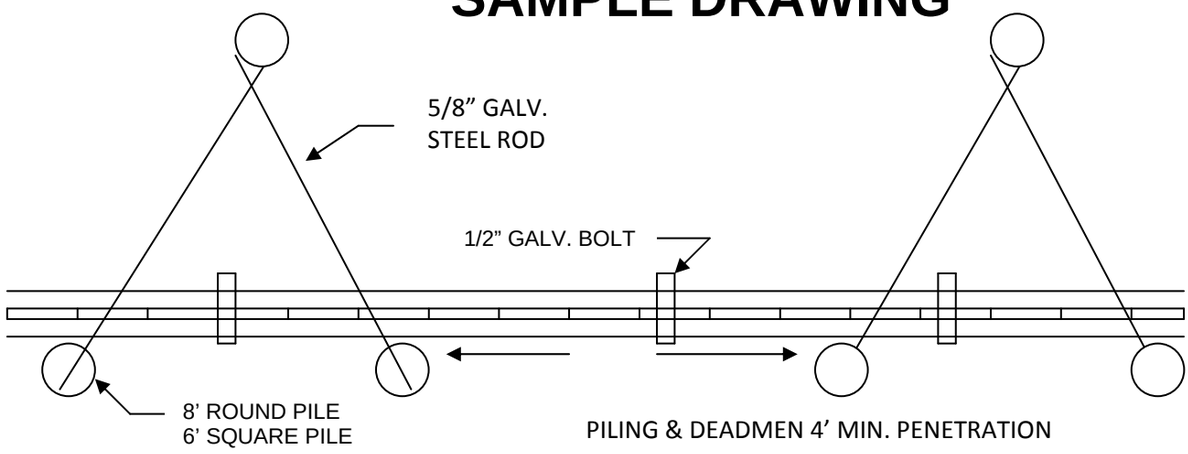

3’ X 8’ WHALER

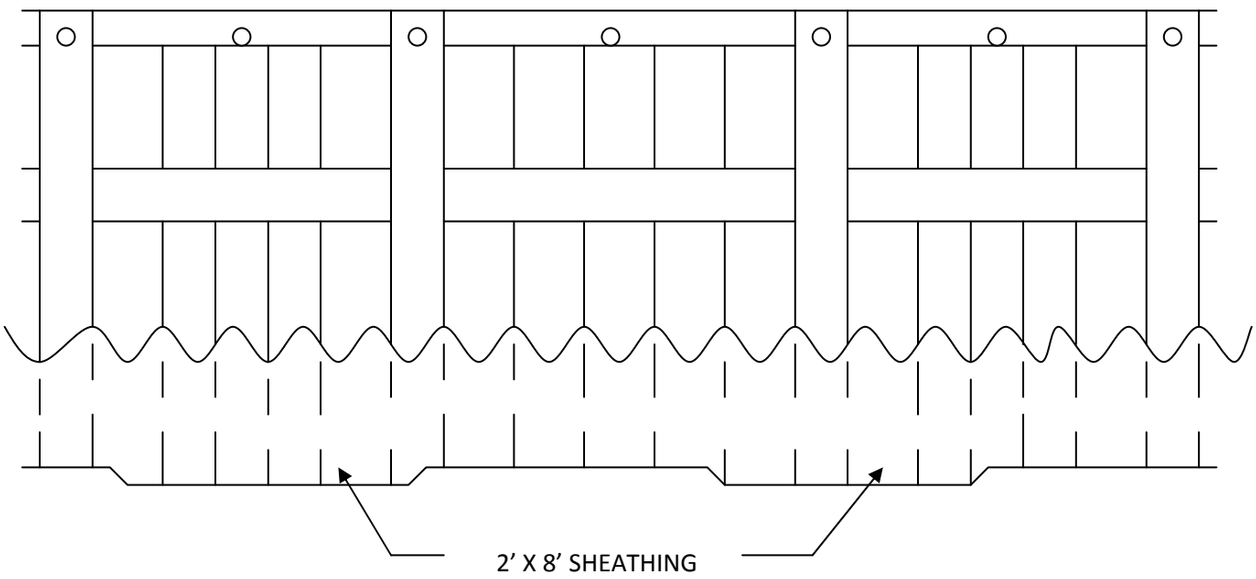

SHEATHING 3’ MIN. PENETRATION

CROSS SECTION

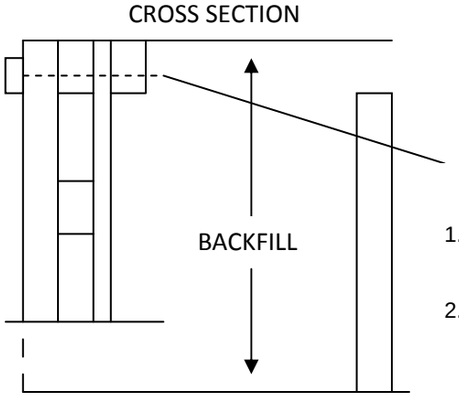

NOTE:

1. ALL HARDWARE GALVANIZED
2. ALL WOOD TREATED
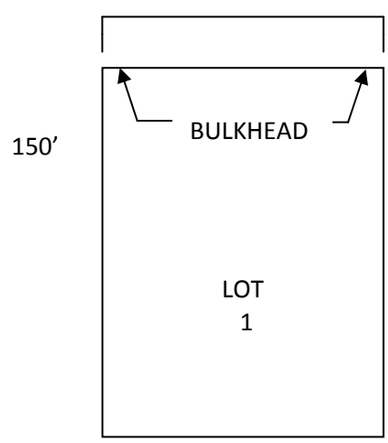
LAKE LIVINGSTON